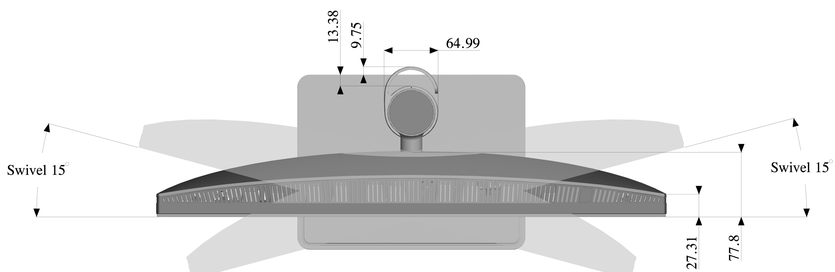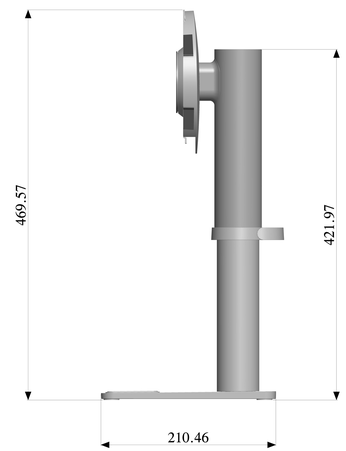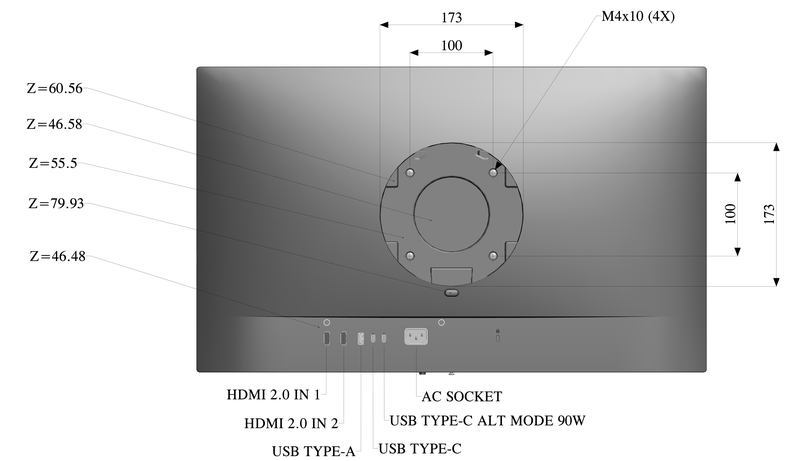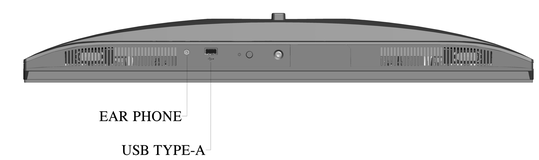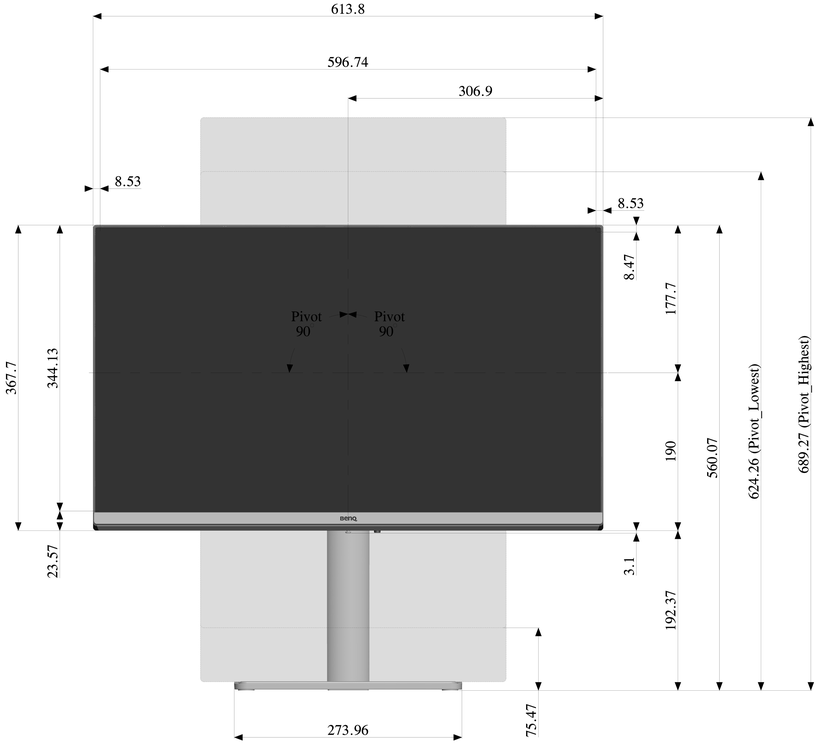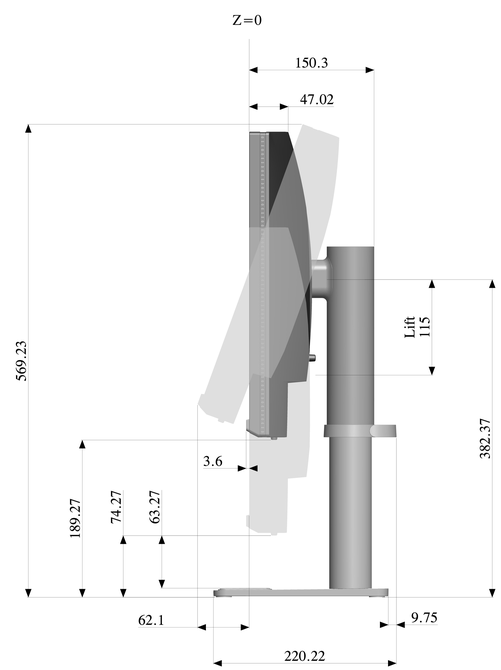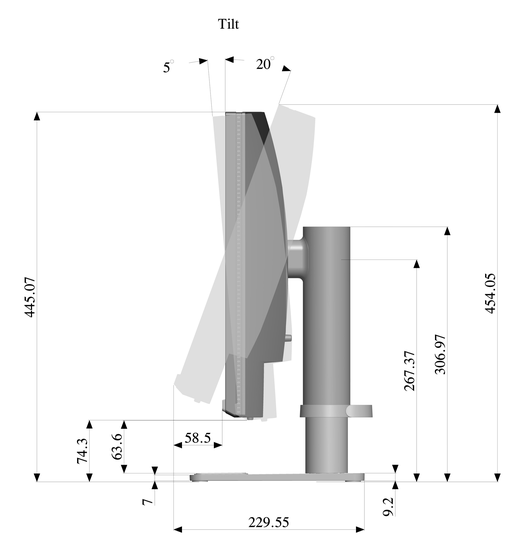BENQ MODEL NAME MA270U
Unit: mm
Dimension: Norminal
Drawing: Not to Scale